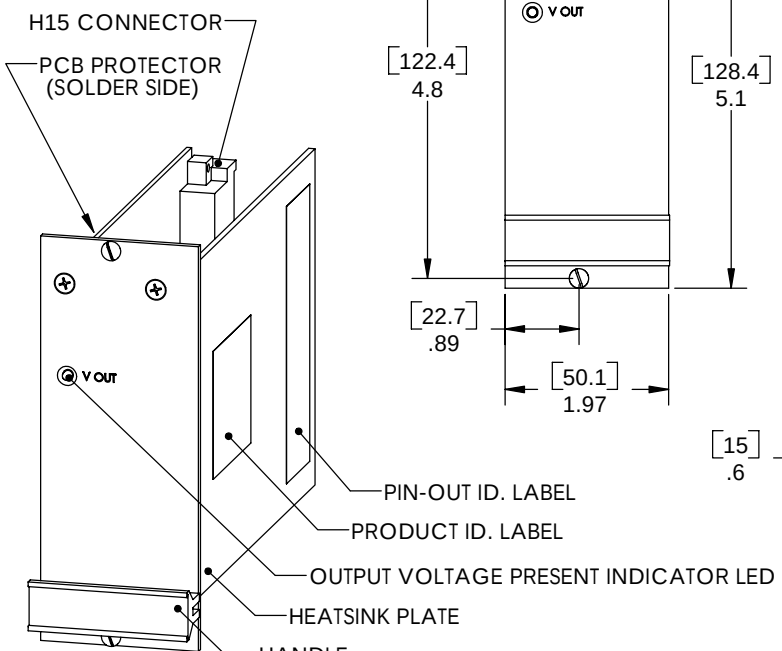

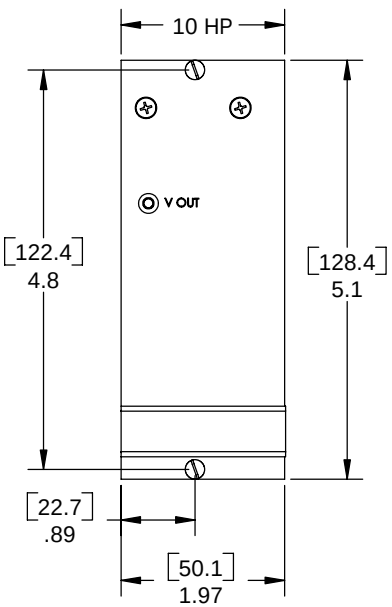

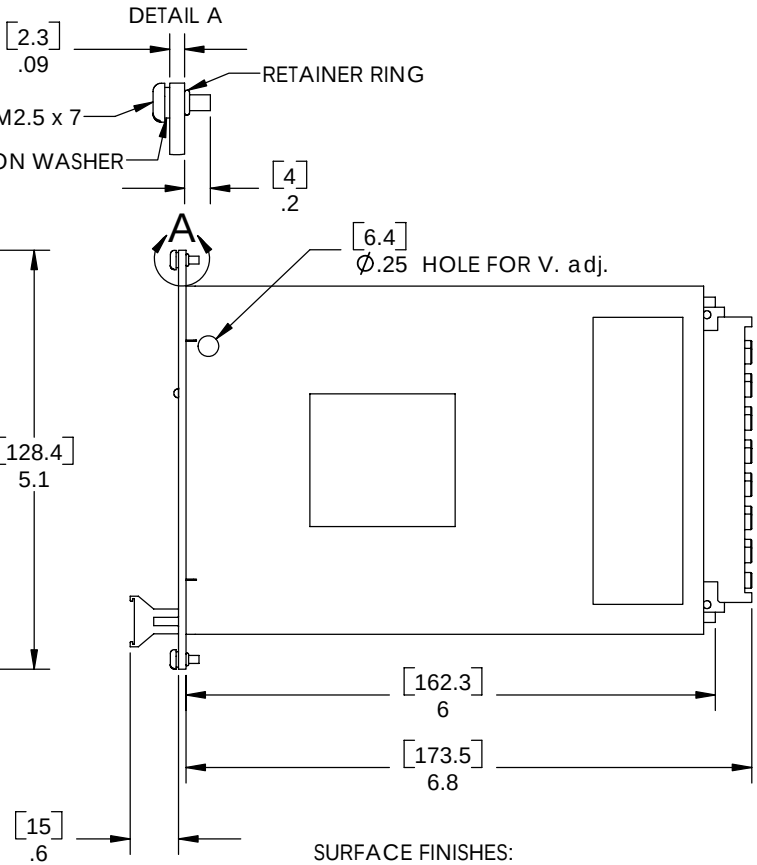

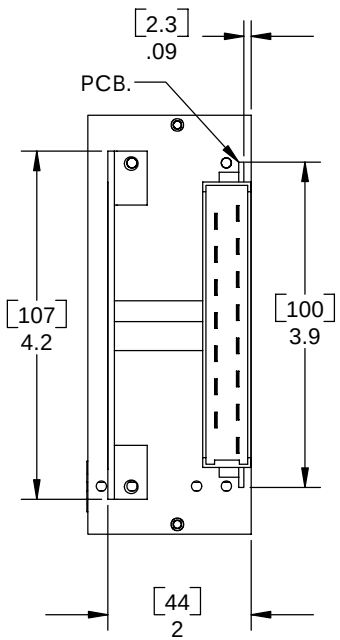

SURFACE FINISHES:
FRONTPANEL; HANDLE's SIDE: CLEAR ANODIZED
INSIDE: CLEAR IRIDITED AS PER MIL-C-5541-E CLASS 3 (CLEAR)
HEATSINK PLATE: YELLOW IRIDATED AS PER MIL-C-5541 CLASS 1a ON BOTH SIDES

MATERIALS:
FRONTPANEL AND HEATSINK PLATE: ALUMINUM 5052-H32
PCB COVER: FR4

EDGES & HOLES DEBURRED
SURFACES FREE OF SCRATCHES

DIMENSIONS ARE IN INCHES
(mm)TOLERANCES ON
DECIMALS: XXX ± 0.008"
XX ± 0.012"
ANGLES: ± 2°
FRACTIONS: ± 1/64"
UNLESS OTHERWISE STATED

THIS DOCUMENT IS THE PROPERTY OF ABSOPULSE ELECTRONICS LTD. ITS CONTENTS ARE PROPRIETARY AND MAY NEITHER BE COPIED, REPRODUCED NOR ITS CONTENTS DISCLOSED TO OTHERS WITHOUT PRIOR WRITTEN AGREEMENT FROM ABSOPULSE ELECTRONICS LTD.

Title:	Part of:	Drawn by:	Checked by:	Approved by:	Revision:	Date:	Drawing No:
OUTLINE DRAWING	10HP x 160mm EURO-CARD					JAN.10.06	

ABSOPULSE